totalElement

SPECIFICATION SHEET
Part no. D14X316N52

Disc Magnet

1/4 x 3/16 Inch (6.35 x 4.76 mm)

Diameter x Thickness

ISOMETRIC VIEW — Not to scale



SPECIFICATIONS	
DIAMETER	0.250 Inch [6.35 mm]
THICKNESS	0.1875 Inch [4.76 mm]
TOLERANCE	±0.004 Inch [±0.10 mm]
MATERIAL	Sintered Neodymium (NdFeB)
GRADE	N52
COATING	Nickel-Copper-Nickel (Ni-Cu-Ni)
MAGNETIZATION	Axially, through the thickness
PULL FORCE	3.7 lbs (1.7 kg)
SURFACE FIELD	6,150 Gauss (615 mT)
WEIGHT (EACH)	1.1 g (0.039 oz)

DIMENSIONS Inch [mm] · not to scale

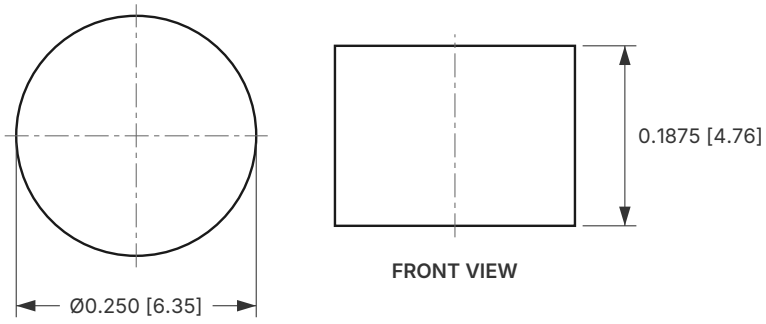

MAGNETIZATION



Axially magnetized through the 0.1875 [4.76] thickness. Pole faces shown for illustration.

GRADE PROPERTIES · N52

PROPERTY	SI	CGS / IMPERIAL
Remanence (Br)	1.43–1.48 T	14.3–14.8 kG
Coercivity (Hcb)	≥ 836 kA/m	≥ 10.5 kOe
Intrinsic coercivity (Hcj)	≥ 876 kA/m	≥ 11 kOe
Max. energy product (BH)max	398–422 kJ/m³	50–53 MGOe
Max. operating temperature	80 °C	176 °F

Typical values for sintered NdFeB of grade N52 at room temperature, not measured on this part. The highest safe working temperature also depends on the magnet's shape and how it's used.

Handling: neodymium magnets are brittle and can chip, or pinch skin, if they snap together. Keep them away from pacemakers and magnetic media.

VIEW ONLINE

Scan to open this magnet on totalElement.com.

CAD FILES

The technical drawing and 3D model are on the product page.

totalElement
totalElement.com
help@totalelement.com
1 (855) 328-2822