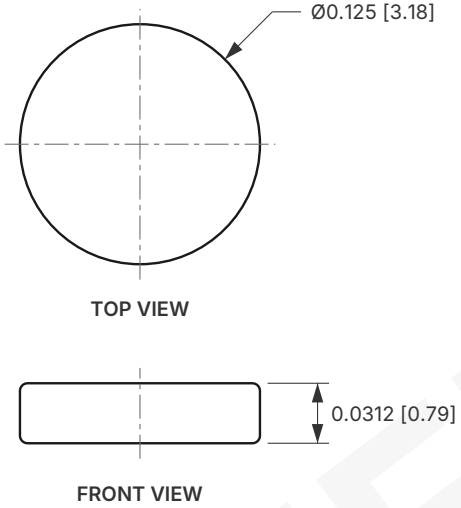

ISOMETRIC VIEW

Not to scale

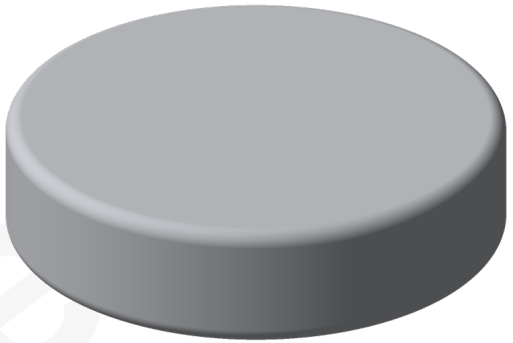

MAGNETIZATION



Axially magnetized through the 0.0312 [0.79] thickness. Pole faces shown for illustration.

VIEW ONLINE

Scan to open this magnet on totalElement.com.

NOTES

1. Dimensions are in Inch [mm] and are nominal.
2. Tolerance applies to all dimensions unless otherwise noted (see Part Data).
3. Axially magnetized through the 0.0312 [0.79] thickness. Magnetization axis is vertical in the front view.
4. Do not scale drawing.

PART DATA

MATERIAL	Neodymium (NdFeB)
GRADE	N52
COATING	Nickel-Copper-Nickel (Ni-Cu-Ni)
TOLERANCE	±0.004 Inch [±0.10 mm]
SIZE	1/8 x 1/32 Inch

totalElement

totalElement.com
help@totalelement.com

TITLE

Disc Magnet

1/8 x 1/32 Inch (Diameter x Thickness)

DWG NO.	SCALE
D18X132N52	10:1

SHEET	UNITS	PROJECTION
1 OF 1	Inch [mm]	

totalElement