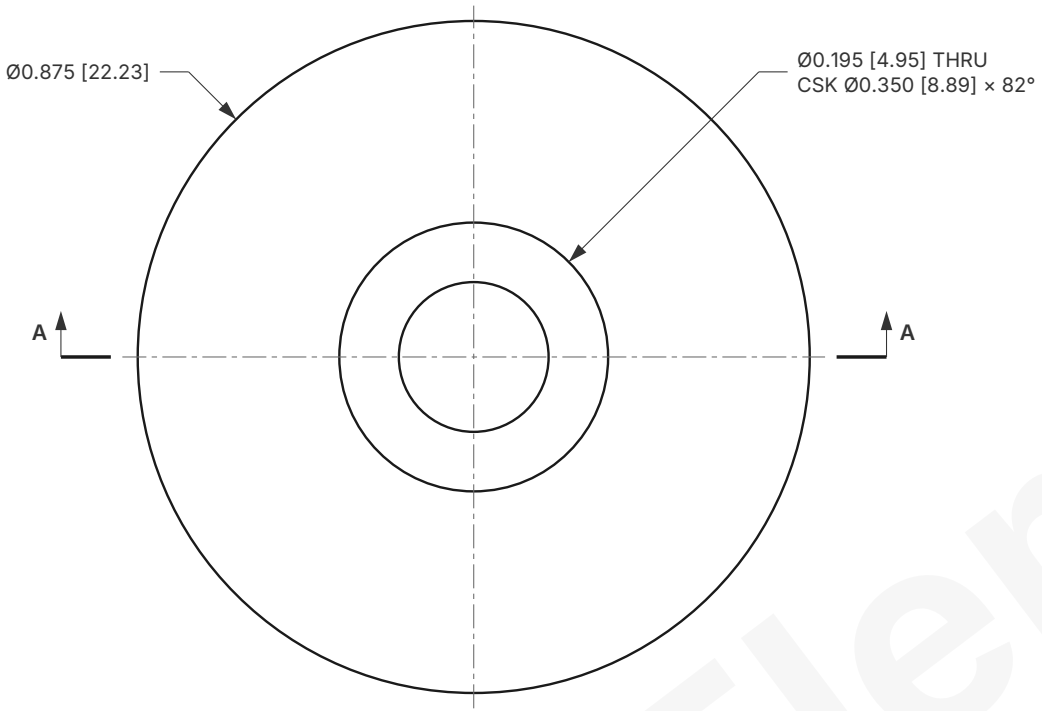

TOP VIEW

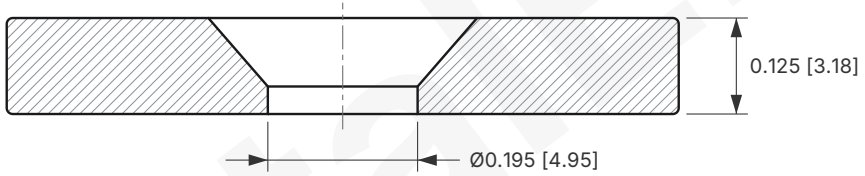

SECTION A-A

ISOMETRIC VIEW

Not to scale

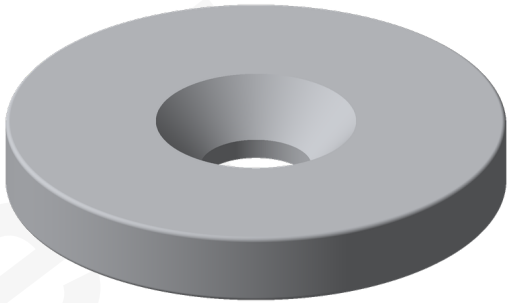

MAGNETIZATION



NORTH
Countersink on N face

SOUTH
Countersink on S face

Axially magnetized through the 0.125 [3.18] thickness. One side countersunk. Available in north or south; both versions are shown.

VIEW ONLINE

Scan to open this magnet on totalElement.com.

NOTES

1. Dimensions are in Inch [mm] and are nominal.
2. Tolerance applies to all dimensions unless otherwise noted (see Part Data).
3. Axially magnetized through the 0.125 [3.18] thickness. Magnetization axis is vertical in the front view.
4. Countersunk on one side. Available in north or south: the countersink is on the north (N) pole face or on the south (S) pole face.
5. Countersink sized for #8 flat-head screws.
6. Do not scale drawing.

PART DATA

MATERIAL	Neodymium (NdFeB)
GRADE	N52
COATING	Nickel-Copper-Nickel (Ni-Cu-Ni)
TOLERANCE	±0.004 Inch [±0.10 mm]
COUNTERSINK	One side, north or south
SIZE	7/8 x 1/8 Inch

totalElement

totalElement.com
help@totalelement.com

TITLE

Countersunk Disc Magnet

7/8 x 1/8 Inch (Outer Diameter x Thickness)

DWG NO.	SCALE
DCS78X18N52	4:1

SHEET	UNITS	PROJECTION
1 OF 1	Inch [mm]	

totalElement